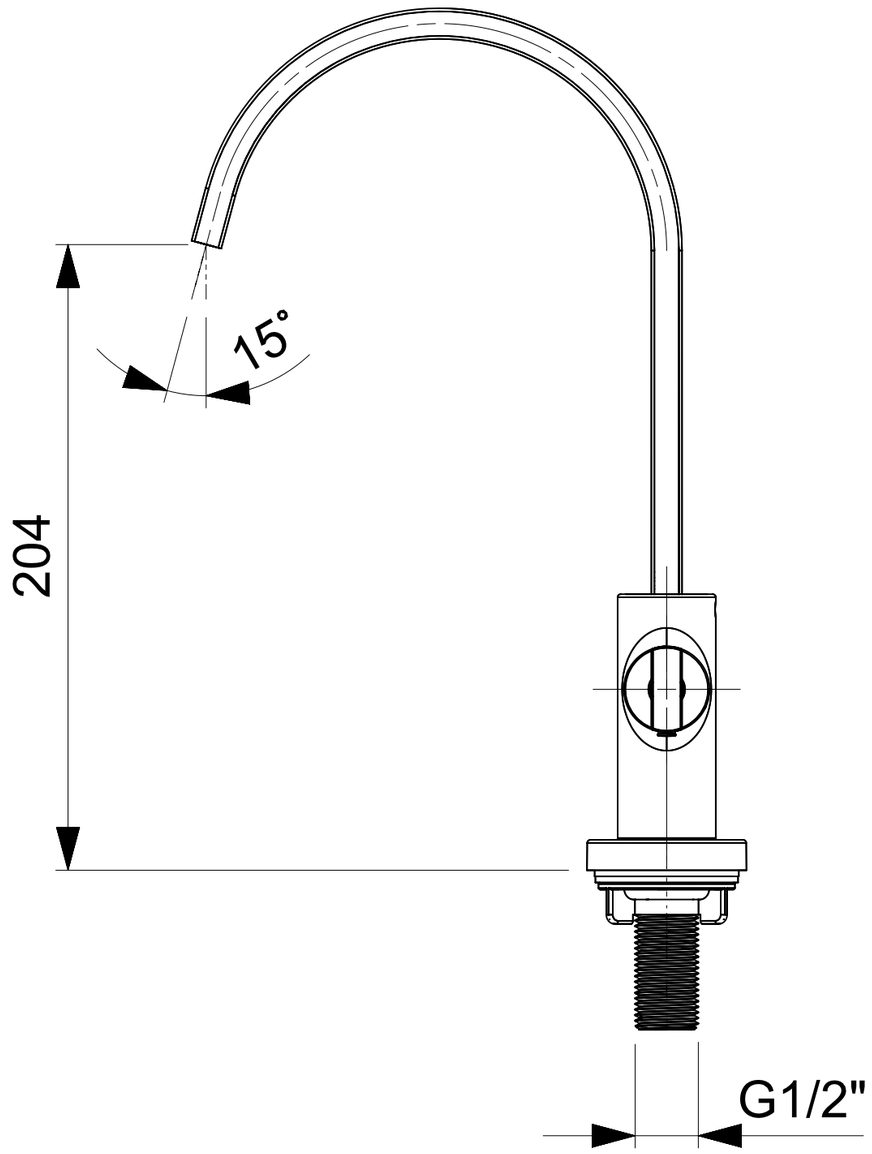
15°
204
G1/2"

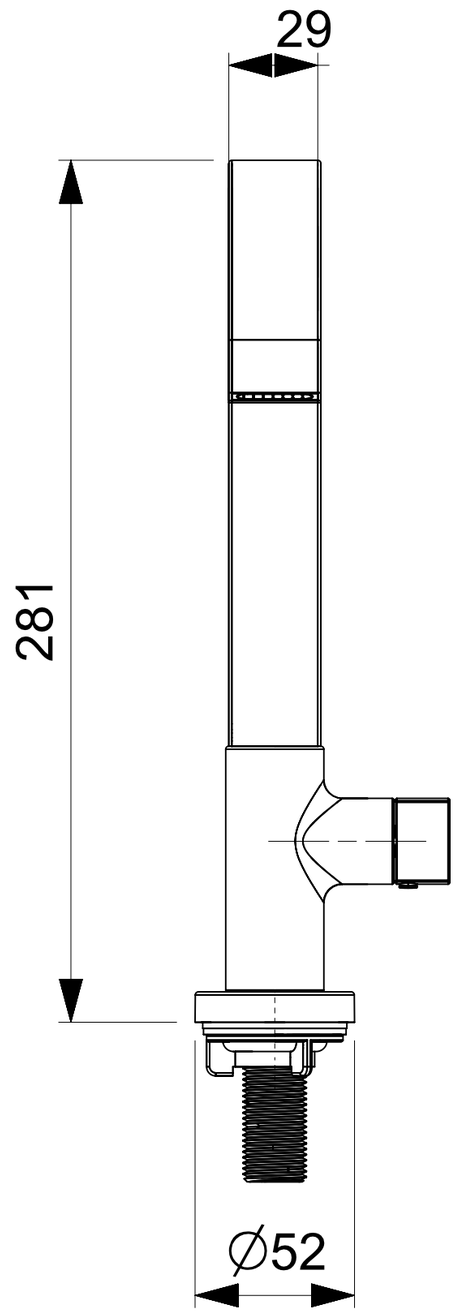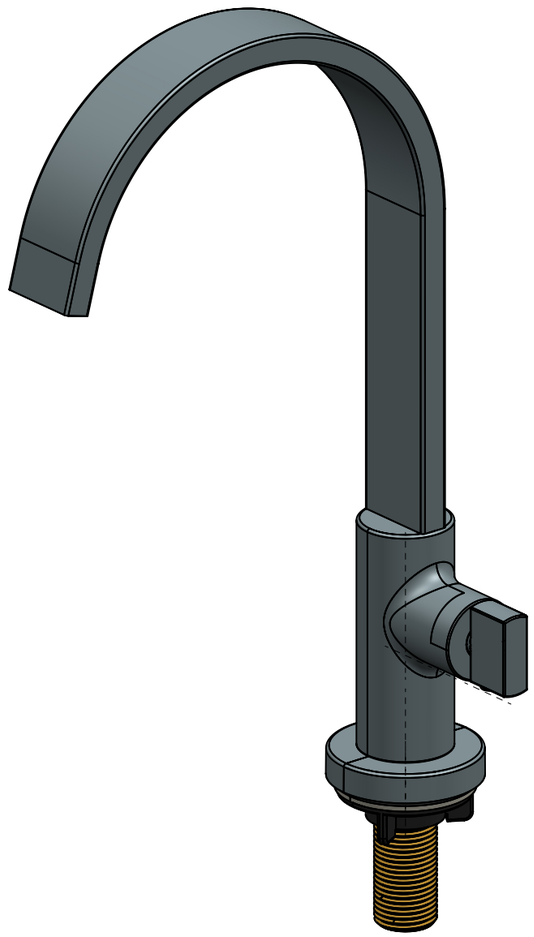
29
281
∅52